THE HEART OF FRESHNESS

OPERATING INSTRUCTIONS

BETRIEBSANLEITUNG

INSTRUCTION DE SERVICE

KB-104-7

2KES-05(Y) .. 2FES-3(Y)

2EES-2(Y) .. 2CES-4(Y)

22EES-4(Y) .. 22CES-8(Y)

4FES-3(Y) .. 4BES-9(Y)

44FES-6(Y) .. 44BES-18(Y)

4VE(S)-6Y .. 4NE(S)-20(Y)

44VE(S)-14(Y) .. 44NE(S)-40(Y)

4JE-13Y .. 4FE-35(Y)

44JE-30(Y) .. 44FE-70(Y)

6JE-22Y .. 6FE-50(Y)

66JE-50(Y) .. 66FE-100(Y)

8GE-50(Y) .. 8FE-70(Y)

4FDC-5Y .. 4CDC-9Y

4VDC-10Y .. 4NDC-20Y

2DES-3.F1Y

4FE-5.F1Y .. 4CE-6.F1Y

4DE-7.F3Y .. 4CE-9.F3Y

4VE-7.F3Y .. 4NE-20.F4Y

Installer
Monteur
Monteur

Table of contents

1 Introduction

These refrigeration compressors are intended for incorporation into refrigeration systems in accordance with the 2006/42/EC Machinery Directive. They may only be put into operation if they have been installed in the refrigeration systems according to these Mounting/Operating Instructions and if the overall system complies with the applicable legal provisions (applied standards: see declaration of incorporation).

The compressors have been built in accordance with state-of-the-art methods and current regulations. Particular importance was placed on user safety.

These Operating Instructions must be kept available near the refrigeration system during the whole lifetime of the compressor.

1.1 Also observe the following technical documents

KT-210: ECOLINE VARISPEED with .F1.

KT-220: ECOLINE VARISPEED with .F3 and .F4.

KT-230: Compressor module for reciprocating compressors.

KW-100: Tightening torques for screw fixings.

2 Safety

2.1 Authorized staff

All work done on compressors and refrigeration systems may only be performed by qualified and authorized staff who have been trained and instructed accordingly. The qualification and expert knowledge of the personnel must correspond to the local regulations and guidelines.

2.2 Residual risks

The compressor may present unavoidable residual risks. That is why any person working on this device must carefully read these Operating Instructions!

The following regulations shall apply:

- relevant safety regulations and standards (e.g. EN 378, EN 60204 and EN 60335),
- generally accepted safety rules,
- EU directives,
- national regulations.

2.3 Safety references

are instructions intended to prevent hazards. Safety references must be stringently observed!

NOTICE
Safety reference to avoid situations which may result in damage to a device or its equipment.

CAUTION
Safety reference to avoid a potentially hazardous situation which may result in minor or moderate injury.

WARNING
Safety reference to avoid a potentially hazardous situation which could result in death or serious injury.

DANGER
Safety reference to avoid an imminently hazardous situation which may result in death or serious injury.

2.3.1 General safety references

State of delivery

CAUTION
The compressor is filled with a holding charge:
Excess pressure 0.2 .. 0.5 bar.
Risk of injury to skin and eyes.
Depressurize the compressor!
Wear safety goggles!

For work on the compressor once it has been commissioned

WARNING
The compressor is under pressure!
Serious injuries are possible.
Depressurize the compressor!
Wear safety goggles!

CAUTION
Surface temperatures of more than 60°C or below 0°C.
Risk of burns or frostbite.
Close off accessible areas and mark them.
Before performing any work on the compressor: switch it off and let it cool down.

3 Application ranges

Compressor types	2KES-05(Y) .. 8FE-70(Y) and 22EES-4(Y) .. 66FE-100(Y)			4FDC-5Y .. 4NDC-20Y
Permitted refrigerants (Further refrigerants upon request)	R134a, R404A, R407A/C/F, R448A, R449A, R450A, R452A, R507A, R513A, R1234yf, R1234ze(E)	further HFO and HFO/ HFC blends only after consultation with BITZER	R22	R410A
Oil charge	BSE32 BSE55 for R134a: t_c > 70°C	Please contact BITZER	B5.2	BSE55
Application limits	see brochure KP-104 and BITZER software			see brochure KP-101 and BITZER software

Tab. 1: Application ranges of ECOLINE compressors

Compressor types	2DES-3.F1Y .. 4NE-20.F4Y
Allowed refrigerants (Further refrigerants upon request)	R134a, R404A, R407A/C/F, R448A, R449A, R450A, R452A, R507A, R513A, R1234yf, R1234ze(E)
Oil charge	BSE32 BSE55 for R134a: t_c > 70°C
Application limits	see brochure KP-102 and BITZER software

Tab. 2: Application ranges of ECOLINE VARISPEED compressors

WARNING
Risk of bursting due to counterfeit refrigerants!
Serious injuries are possible!
Purchase refrigerants only from reputable manufacturers and reliable distributors!

Risk of air penetration during operation in the vacuum range

NOTICE
Potential chemical reactions as well as increased condensing pressure and rise in discharge gas temperature.
Avoid air penetration!

WARNING
A critical shift of the refrigerant ignition limit is possible.
Avoid air penetration!

3.1 Use of flammable refrigerants of the A2L safety group (e.g. R1234yf)

Information
The information in this chapter about the use of refrigerants of the A2L safety group refer to European regulations and directives. In regions outside the EU, observe the local regulations.

Information
For refrigerants of the A3 safety group, e.g. R290 propane or R1270 propylene, specific compressor designs can be delivered upon request. In this case, also observe the additional Operating Instructions.

This chapter describes and gives explanations to the additional residual risks originating from the compressor when using refrigerants of the A2L safety group. This information helps the manufacturer of the system to make the risk assessment for the system. This information may in no way replace the risk assessment for the system.

Design, maintenance and operation of refrigeration systems using refrigerants of the A2L safety group are subject to particular safety regulations.

When installed according to these Operating Instructions and in normal operation conditions without malfunctions, the compressors are free from ignition sources that could ignite the flammable refrigerants R1234yf and R1234ze(E). They are considered as technically tight. No ignition source assessment is available for other refrigerants of the A2L safety group.

Information
When using a flammable refrigerant:
Affix the warning sign “Warning: flammable materials” (W021 according to ISO7010) well visibly to the compressor. An adhesive label showing this warning sign is enclosed with the Operating Instructions.

Refrigerant burning in the terminal box may only happen if several very rare errors occur at the same time. The probability of this event occurring is extremely low. When suspecting burnt refrigerant in the terminal box, wait at least 30 minutes before opening it. According to the present knowledge, this is the time needed for the toxic combustion products to be degraded. It is necessary to use appropriate, acid-resistant gloves. Do not touch moist residues, but let them dry, because they may contain dissolved toxic substances. Never inhale evaporation products. Let the concerned parts be cleaned by trained staff or, if the parts are corroded, dispose of them properly.

3.1.1 Compressor and refrigeration system requirements

DANGER
Fire hazard in the event of refrigerant leakage and in the presence of an ignition source!
Avoid open fire and ignition sources in the engine room and in the hazardous zone!

- Pay attention to the ignition point in air of the refrigerant used, see also EN378-1.
- Vent engine room according to EN378 or install an extraction device.
- To open the pipelines, use only pipe cutters and no open flame!
- Install components from which refrigerant may leak (e.g. low and high pressure limiter or low and high pressure cut-out) only outside the switch cabinet!

If the following safety regulations and adaptions are observed, the BITZER ECOLINE standard compressors can be run with refrigerants of the A2L safety group. Operation of BITZER VARISPEED compressors with refrigerants of the A2L safety group only upon request.

- Observe the max. refrigerant charge according to the installation place and the installation zone! See EN378-1 and local regulations.
- No operation in the vacuum range! Install safety devices for protection against insufficient and excessive pressure and make sure that they are designed in accordance with the requirements of the safety regulations (e.g. EN378-2).
- Avoid air penetration in the system – also during and after maintenance work!

3.1.2 General operation requirements

Operation of the system and personal protection are usually subject to national regulations on product safety, operating reliability and accident prevention. To this end, separate agreements between the contractor and the end user must be made. The provision of the necessary risk assessment for work environment prior to installation and operation of the system is the responsibility of the end user. To this end, cooperation with a notified body is recommended.

- To open the pipelines, use only pipe cutters and no open flame.

4 Mounting

Information
Observe tightening torques for screw fixings according to maintenance instructions KW-100!

4.1 Transporting the compressor

Either transport the compressor screwed onto the pallet or lift it on the eyebolts. Lift the tandem compressor only with a lifting beam, see figure 1, page 7.

DANGER
Suspended load!
Do not step under the machine!

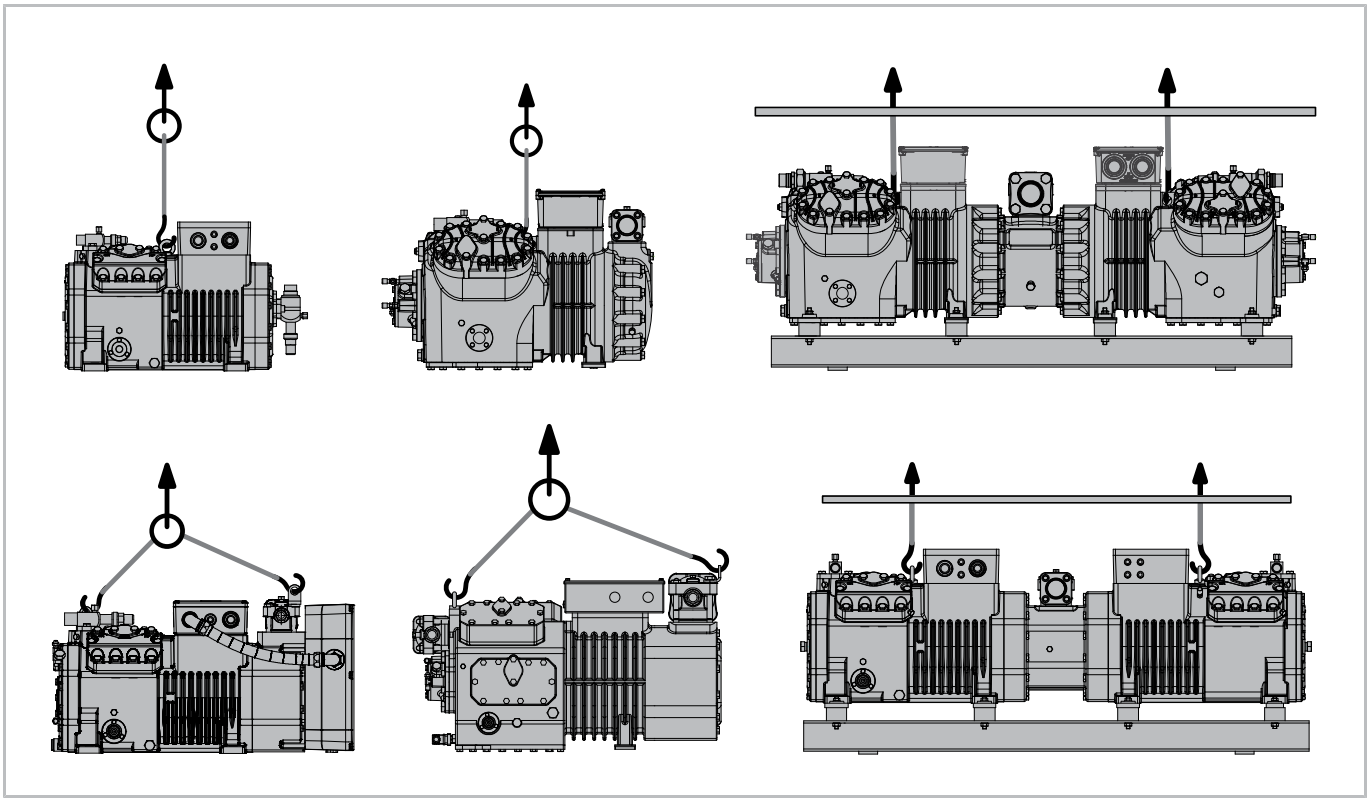

Fig. 1: Lifting the ECOLINE compressor

4.2 Installing the compressor

Install/mount the compressor horizontally. Take suitable measures if the compressor is operated under extreme conditions (e.g. aggressive atmosphere, low outside temperatures, etc.). Consultation with BITZER is recommended.

4.2.1 Vibration dampers

The compressor may be mounted rigidly if there is no danger of fatigue fractures in the pipeline system connected to it. To do so, for compressors

- 2KES-05(Y) .. 2FES-3(Y)
- 2EES-2(Y) .. 2CES-4(Y)
- 4FES-3(Y) .. 4BES-9(Y)
- 2DES-3.F1Y
- 4FE-5.F1Y .. 4CE-6.F1Y
- 4DE-7.F3Y .. 4CE-9.F3Y
- 4FDC-5Y .. 4CDC-9Y

place a disk between each compressor base and frame (part number 313 095 01). Otherwise, the compressor must be mounted on vibration dampers, see figure 2, page 8. This is in particular required when mounting it on shell and tube heat exchangers:

NOTICE
Do not mount the compressor solidly on the heat exchanger!
Risk of damage to the heat exchanger (fatigue fractures).

Mounting the suction gas and discharge gas lines: Place compressor on the vibration elements or mount it rigidly. In this position (operational position), connect the suction gas and discharge gas lines free of stress.

Transport locks for condensing units

To avoid transport damage to condensing units in their state of delivery, the vibration dampers of the compressors are blocked by transport locks. It is absolutely necessary to remove or loosen these locks after mounting.

4.2.2 Type I vibration dampers

After mounting:

- Remove red transport lock (1).
- Retighten fixing screws and fixing nuts (2) and (3).

4.2.3 Type II vibration dampers

After mounting:

- Loosen nut (1) to such an extent that the slotted washer (4) can be removed.
- Remove washer (4).

4.2.4 Type III vibration dampers

After mounting:

- Loosen nut (1) to such an extent that the slotted washer (4) can be removed.
- Remove washer (4).

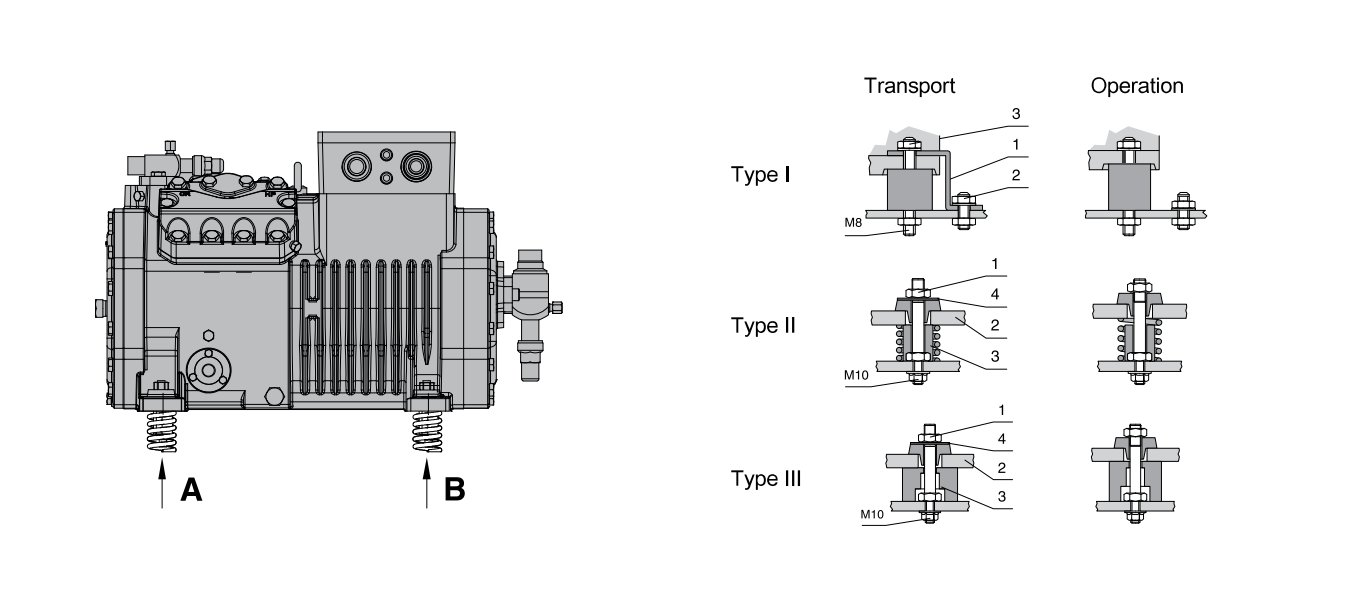

Fig. 2: Vibration dampers

Vibration dampers	Compressor	Crankcase side (A)		Motor side (B)	
		Kit number	Hardness/ Colour	Kit number	Hardness/ Colour
Type I	• 2KES-05(Y) .. 2FES-3(Y)	370 000 19	43 shore	370 000 19	43 shore
	• 2EES-2(Y) .. 2CES-4(Y) 2DES-3.F1Y 22EES-4(Y) .. 22CES-8(Y)	370 000 20	55 shore	370 000 20	55 shore
	• 4FDC-5Y .. 4CDC-9Y 4FES-3(Y) .. 4BES-9(Y) 4FE-5.F1Y .. 4CE-9.F3Y 44FES-6(Y) .. 44BES-18(Y)	370 000 20	55 shore	370 000 20	55 shore
Type II	• 4VDC-10Y .. 4NDC-20Y 4VE(S)-6Y .. 4NE(S)-20(Y)	370 003 05	yellow	370 003 07	brown
	• 4VE-7.F3Y .. 4NE-20.F4Y	370 004 07	red	370 004 08	black
	• 4JE-13Y .. 4HE-25(Y)	370 004 01	brown	370 004 02	red

Vibration dampers	Compressor	Crankcase side (A)		Motor side (B)	
	4GE-20Y, 4GE-23(Y) 4FE-25(Y)				
	• 4GE-30(Y) 4FE-28(Y) .. 4FE-35(Y) 6JE-22Y .. 6FE-50(Y)	370 004 01	brown	370 004 03	blue
	• 8GE-50(Y) .. 8FE-70(Y)	370 004 02	red	370 004 04	black
Type III	• 44VE(S)-14(Y) .. 44NE(S)-40(Y)	2x 370 002 08	brown	2x 370 002 08	brown
	• 44JE-30(Y) .. 44GE-46(Y)	2x 370 002 01	brown	2x 370 002 02	red
	• 44GE-60(Y) 44FE-56(Y), 44FE-70(Y)	2x 370 002 01	brown	2x 370 002 03	blue
	• 66JE-50(Y) .. 66FE-100(Y)	2x 370 002 02	red	2x 370 002 03	blue
	• 8GE-50(Y) .. 8FE-70(Y)	370 002 02	red	370 002 06	black

Tab. 3: Vibration dampers

4.3 Connecting the pipelines

WARNING
The compressor is under pressure!
Serious injuries are possible.
Depressurize the compressor!
Wear safety goggles!

NOTICE
Potential chemical reactions due to air penetration!
Proceed swiftly and keep shut-off valves closed until evacuation.

4.3.1 Pipe connections

The pipe connections are suitable for pipes in all common dimensions in millimetres and inches. Brazed connections have stepped diameters. The pipe will immerge more or less depending on its dimensions. If necessary, the bushing may even be cut at the end with the largest diameter.

4.3.2 Shut-off valves

During operation: Only operate the shut-off valves either fully opened or fully closed.

- Remove the protective cap.
- First loosen the packing gland with ¼ turn to the left.
- Then open or close the valve spindle.
- After that, retighten the packing gland and screw the protective cap on again.

Any installation position and flow direction can be chosen.

CAUTION
Depending on the operation mode, the shut-off valves may become very cold or very hot.
Risk of burning or frostbite!
Wear suitable protective equipment!

NOTICE
Do not overheat the shut-off valves!
Cool the valve body during and after the brazing operation.
Maximum brazing temperature 700°C!

When turning or mounting shut-off valves:

NOTICE
Risk of damage to the compressor.
Tighten screws crosswise in at least 2 steps to the prescribed tightening torque.
Test tightness before commissioning!

4.3.3 Pipelines

Use only pipelines and system components which are

- clean and dry inside (free from slag, swarf, rust and phosphate coatings) and
- which are delivered with an air-tight seal.

Depending on the compressor versions, they are supplied with blanking plates on the pipe connections or shut-off valves. These plates must be removed before commissioning.

NOTICE
For systems with rather long pipelines or for brazing operations without protective gas:
Install the suction-side cleaning filter (mesh size < 25 µm).

NOTICE
Risk of compressor damage!
Generously sized filter dryers should be used to ensure a high degree of dehydration and to maintain the chemical stability of the circuit.
Make sure to choose a suitable quality (molecular sieves with specially adapted pore sizes).

4.4 Start unloading (SU) and Capacity control (CRII)

For protection against transport damage, the valve top parts will be delivered as accessories kit. Prior to evacuation, they must be mounted. To do so, replace the blind flange with the top part.

WARNING
The compressor is under pressure!
Serious injuries are possible.
Depressurize the compressor!
Wear safety goggles!

To avoid mix-ups, the cylinder head and valve flange are labelled with SU and CR, respectively. An alignment pin in the flange surface only allows correct positioning (see figure 3, page 10).

Start unloading (SU)

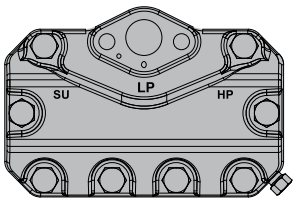

4VE(S)-6Y .. 4NE(S)-20(Y)
4VDC-10Y .. 4NDC-20Y

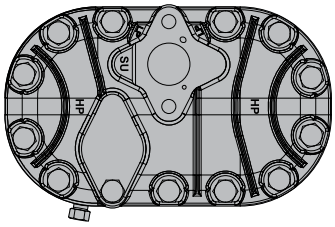

4JE-13Y .. 6FE-50(Y)

Capacity control (CRII)

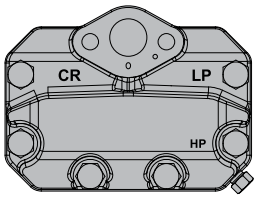

2EES-2(Y) .. 2CES-4(Y)
4FES-3(Y) .. 4BES-9(Y)
4FDC-5Y .. 4CDC-9Y

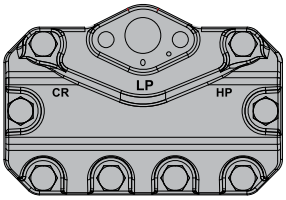

4VE(S)-6Y .. 4NE(S)-20(Y)
4VDC-10Y .. 4NDC-20Y

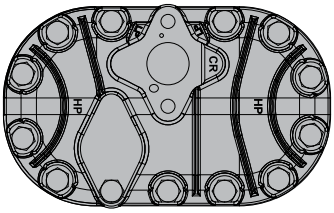

4JE-13Y .. 6FE-50(Y)

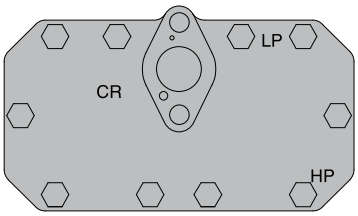

8GE-50(Y) .. 8FE-70(Y)

Fig. 3: Cylinder heads for start unloading (SU) and capacity control (CRII)

Activation of the start unloading and capacity control functions can be performed advantageously by the compressor module CM-RC-01, see Technical Information KT-230 and brochure KP-104.

4.4.1 Start unloading (SU)

Option for:

- 4VE(S)-6Y .. 4NE(S)-20(Y)
- 4JE-13Y .. 4FE-35(Y)
- 6JE-22Y .. 6FE-50(Y)
- 4VDC-10Y .. 4NDC-20Y

Retrofitting requires the cylinder head in question to be replaced.

- 8GE-50(Y) .. 8FE-70(Y)

The motor of the 8-cylinder compressor equipped with a special winding wiring guarantees a high torque even in case of a part winding start. This is why no start unloading is required for these compressors.

Mounting position of the valve top parts for start unloading, see figure 4, page 11.

Mounting the discharge gas temperature sensor, see chapter Discharge gas temperature sensor, page 20.

The start unloading requires a check valve in the discharge gas line. For detailed information on the start unloading, see Technical Information KT-110.

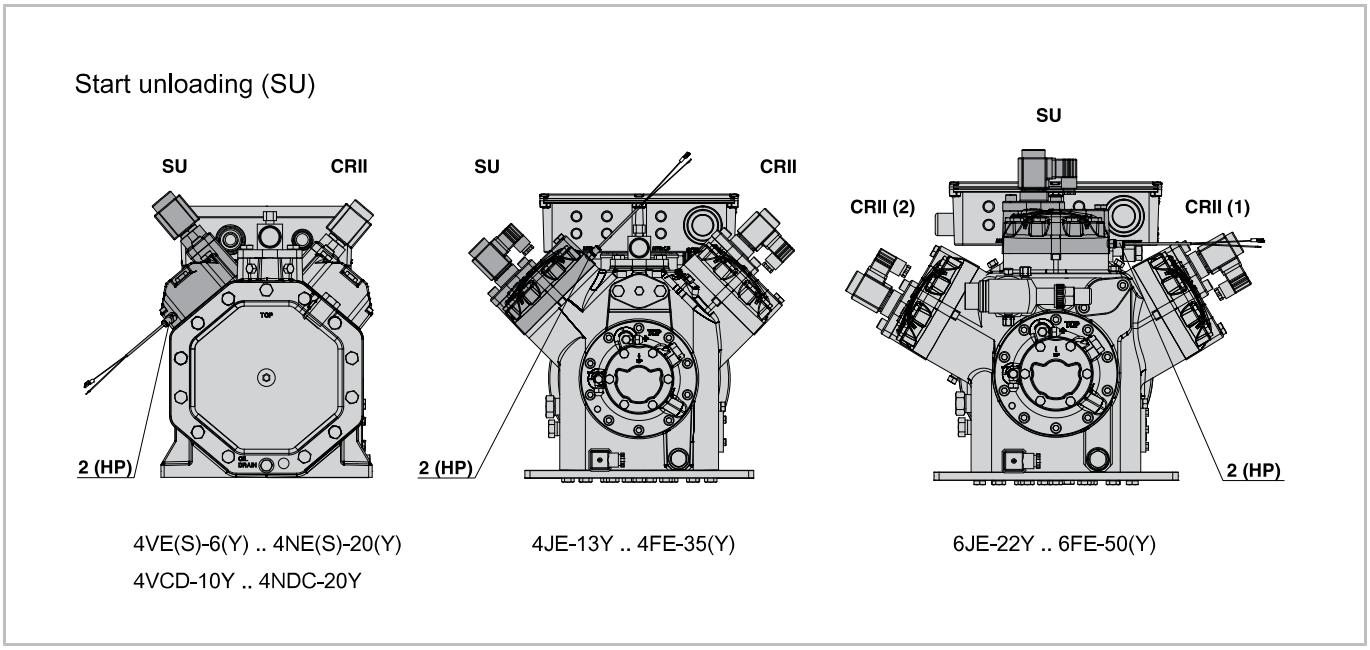

Fig. 4: Position of the cylinder heads and valve top parts for start unloading in case of factory mounting

2 (HP)	Discharge gas temperature sensor

4.4.2 Capacity control (CRII)

optionally for:

- 2EES-2(Y) .. 2CES-4(Y)
- 4FES-3(Y) .. 4BES-9(Y)
- 4VE(S)-6Y .. 4NE(S)-20(Y)
- 4JE-13Y .. 4FE-35(Y)
- 6JE-22Y .. 6FE-50(Y)
- 8GE-50(Y) .. 8FE-70(Y)
- 22EES-4(Y) .. 66FE-100(Y)
- 4FDC-5Y .. 4CDC-9Y
- 4VDC-10Y .. 4NDC-20Y

Retrofitting requires the cylinder head in question to be replaced.

Mounting position of the valve top parts for capacity control, see figure 5, page 12.

- Tandem compressors: With a possible load sequence switching in mind, both compressor parts should be equipped with the same number of CRII cylinder heads, see figure 5, page 12.

For detailed information on the CRII system, the capacity control for ECOLINE compressors, see Technical Information KT-101.

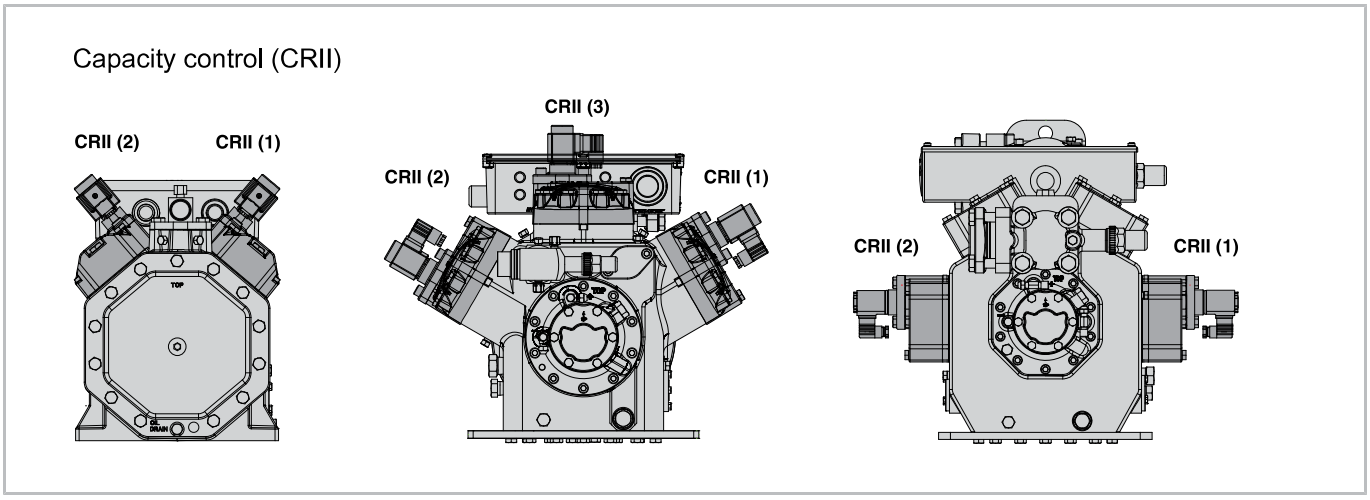

Fig. 5: ECOLINE 4-, 6- and 8-cylinder compressors fully equipped with the CRII system.

4.5 Connections and connection diagrams

Legend, see table 4, page 17.

4.5.1 Connection diagrams of single compressors

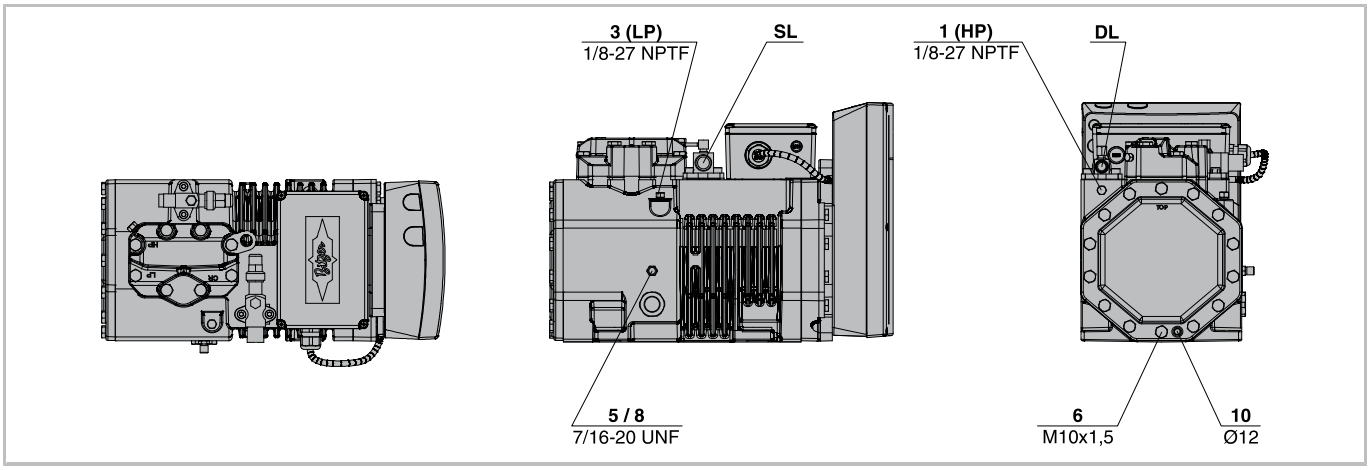

Fig. 6: 2DES-3.F1Y

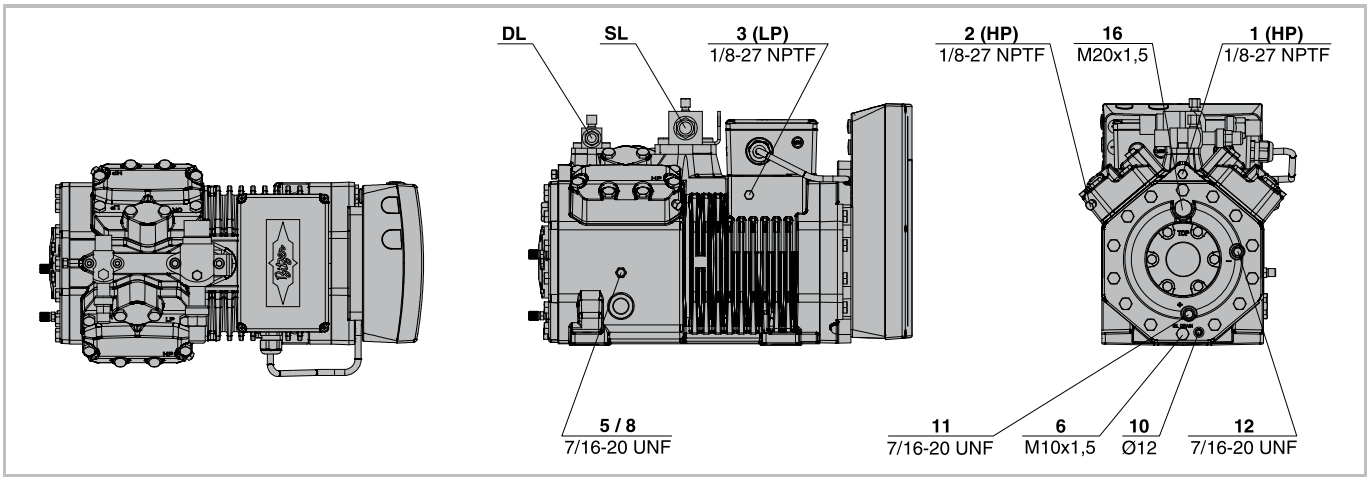

Fig. 7: 4FE-5.F1Y .. 4CE-9.F3Y (figure shows compressor with .F1 frequency inverter)

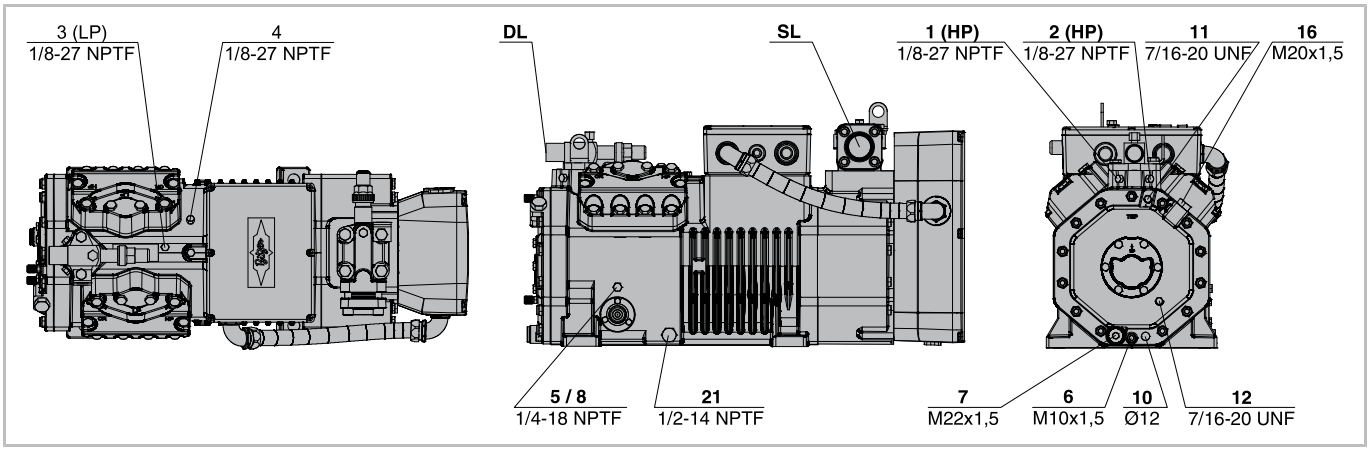

Fig. 8: 4VE-7.F3Y .. 4NE-20.F4Y

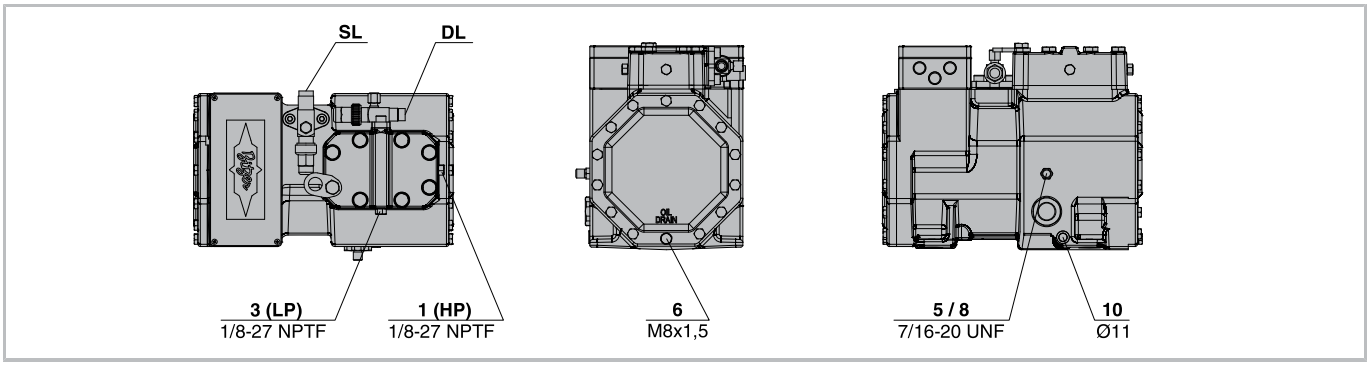

Fig. 9: 2KES-05(Y) .. 2FES-3(Y)

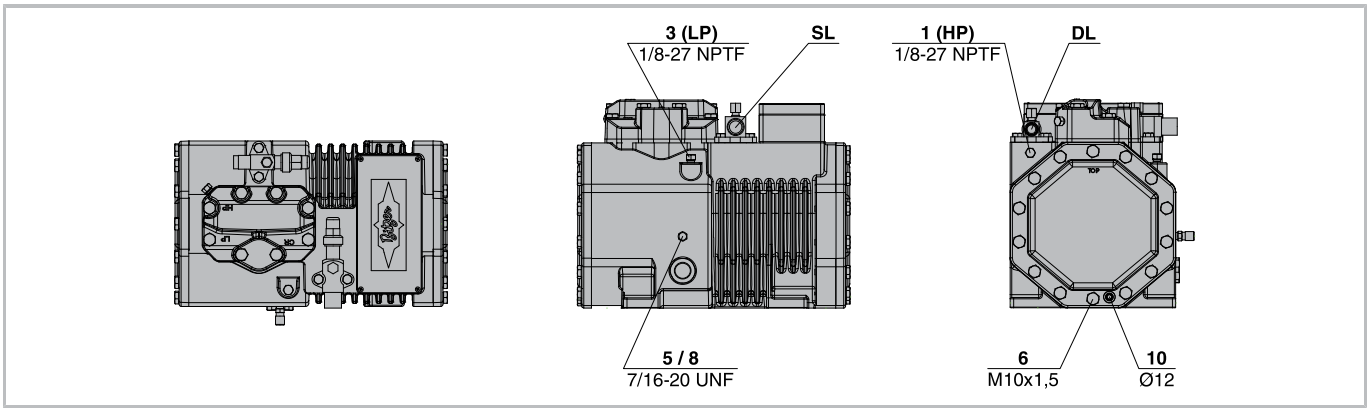

Fig. 10: 2EES-2(Y) .. 2CES-4(Y)

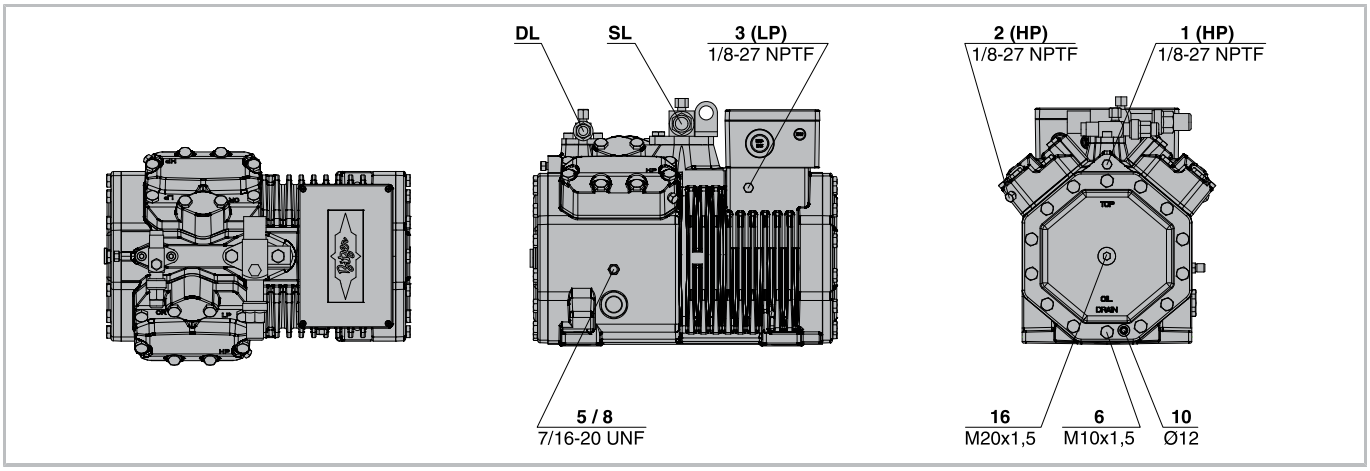

Fig. 11: 4FES-3(Y) .. 4BES-9(Y), 4FDC-5Y .. 4CDC-9Y

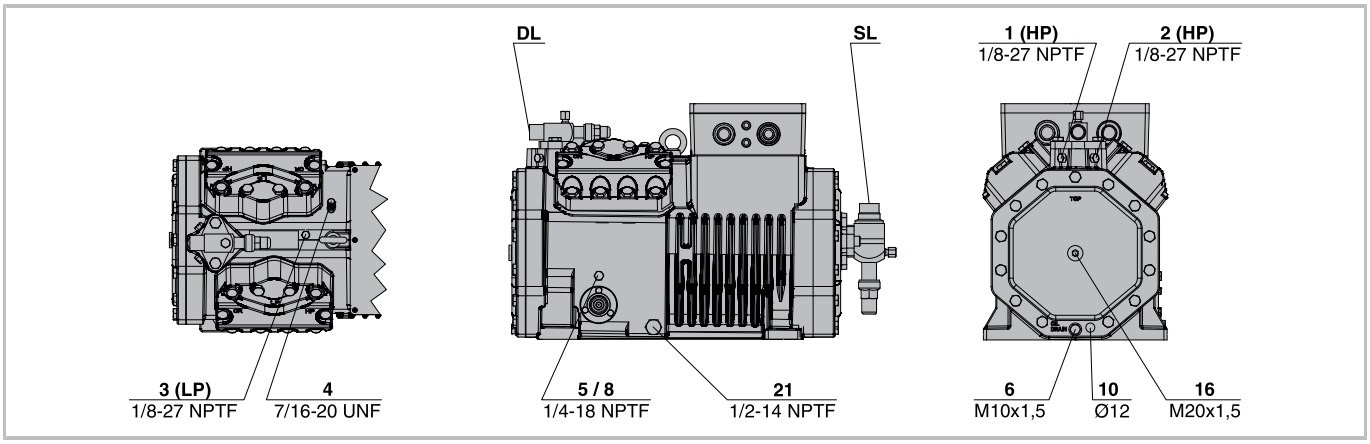

Fig. 12: 4VES-6Y .. 4NES-20(Y), 4VDC-10Y .. 4NDC-20Y

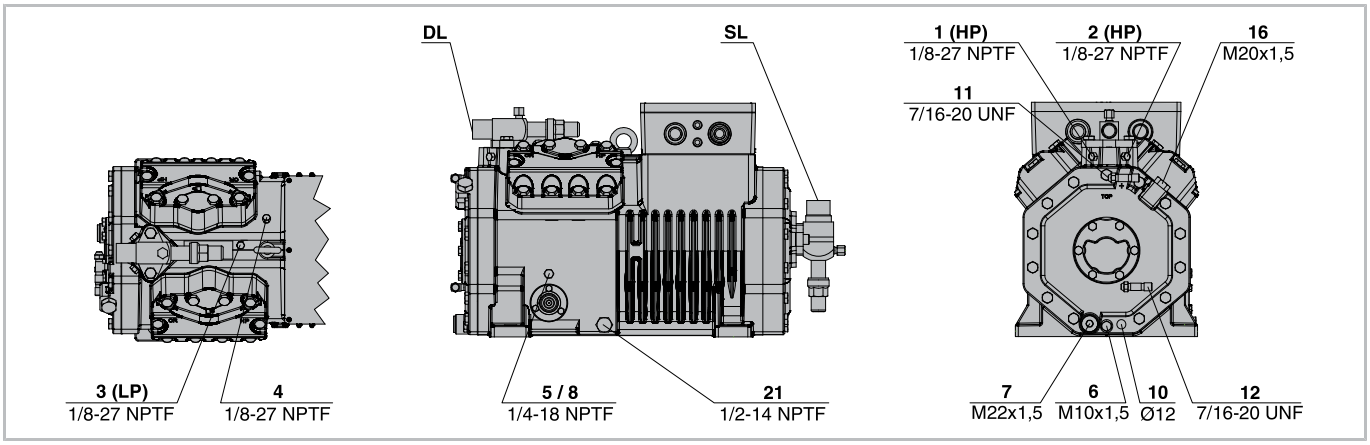

Fig. 13: 4VE-6Y .. 4NE-20(Y)

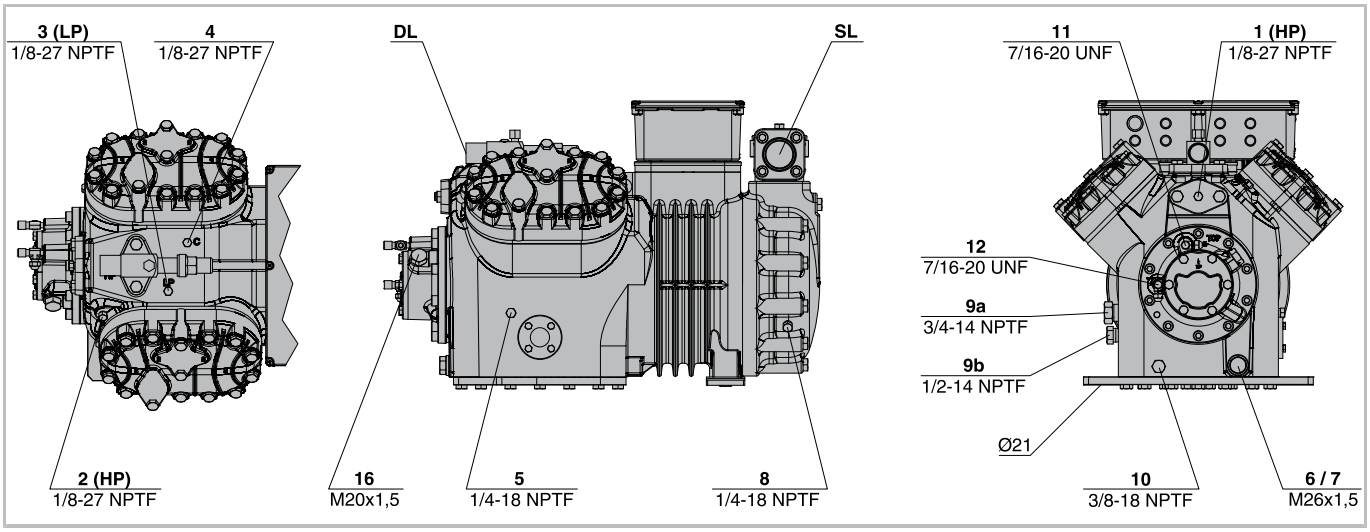

Fig. 14: 4JE-13Y .. 4FE-35(Y)

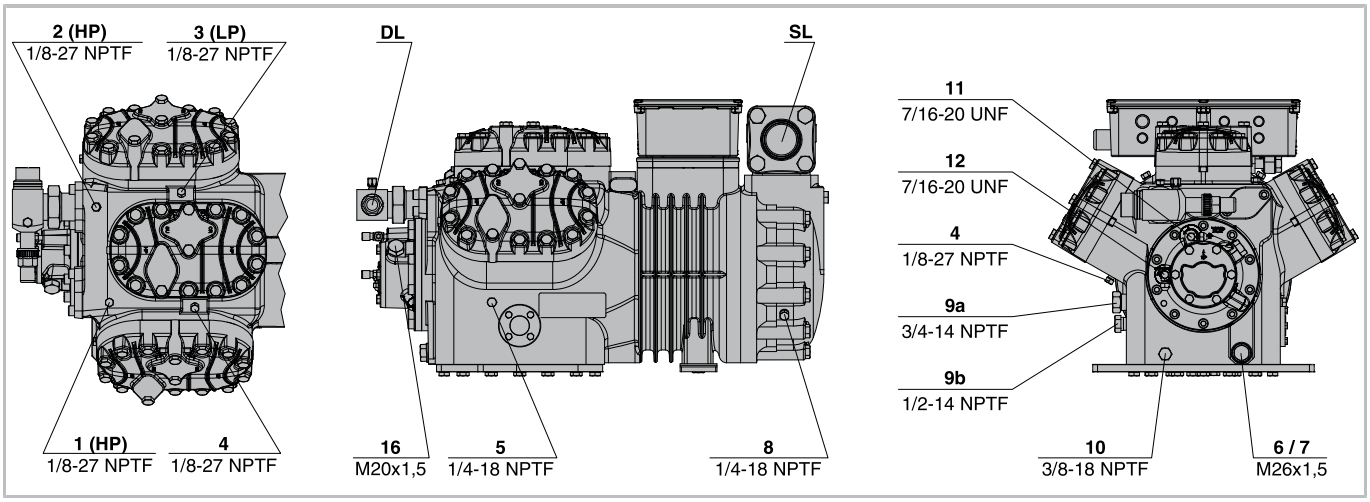

Fig. 15: 6JE-22Y .. 6FE-50(Y)

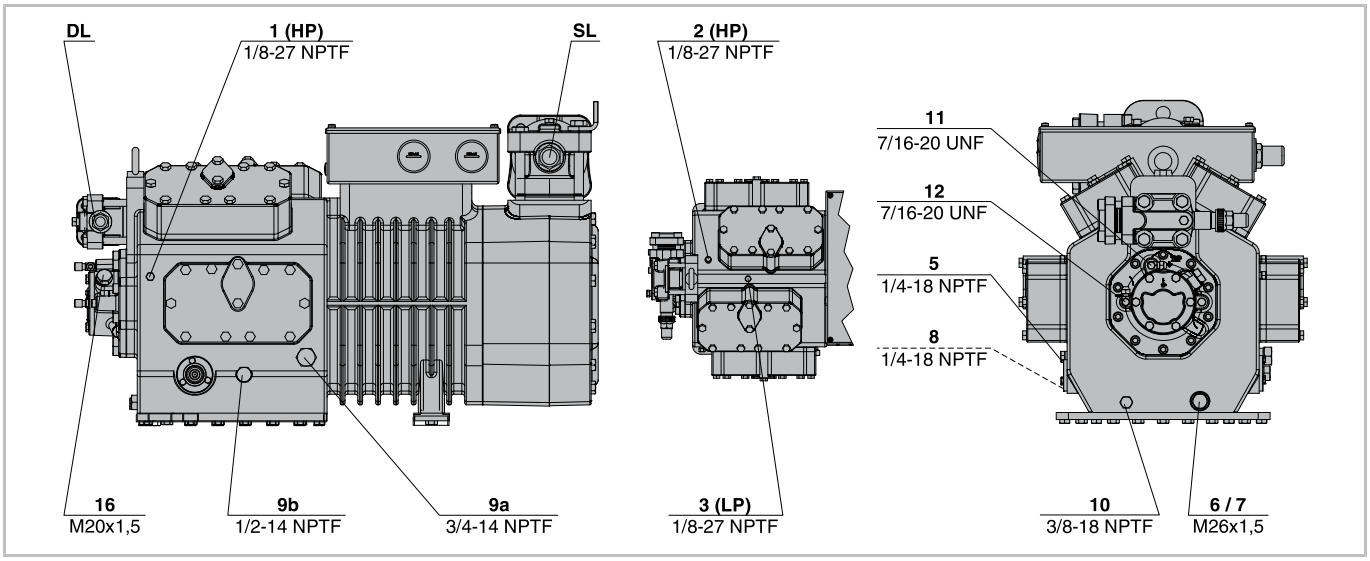

Fig. 16: 8GE-50(Y) .. 8FE-70(Y)

4.5.2 Connection diagrams of tandem compressors

Legend, see table 4, page 17.

Other connections same as in the corresponding single compressor

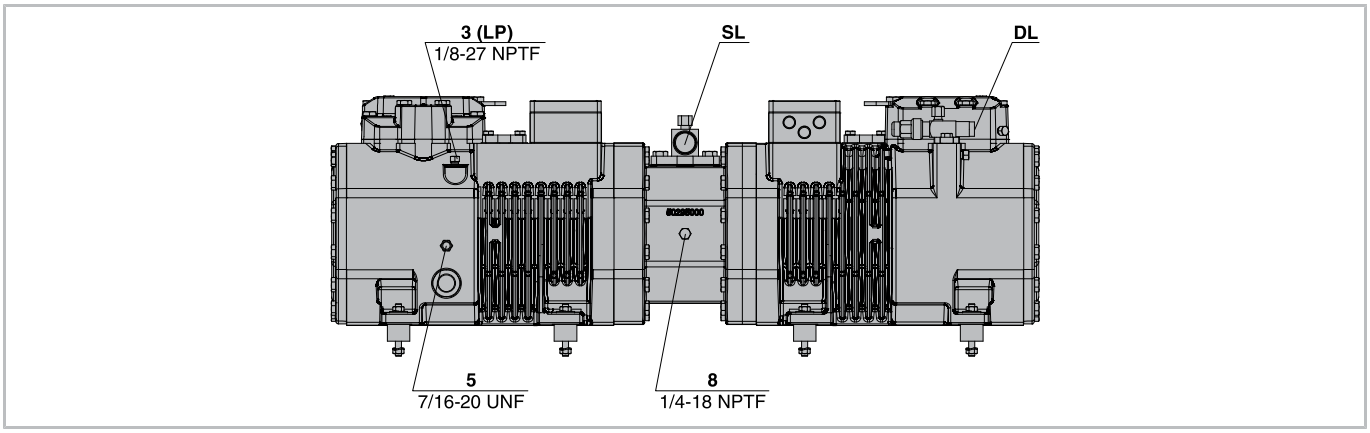

Fig. 17: 22EES-2(Y) .. 22CES-4(Y)

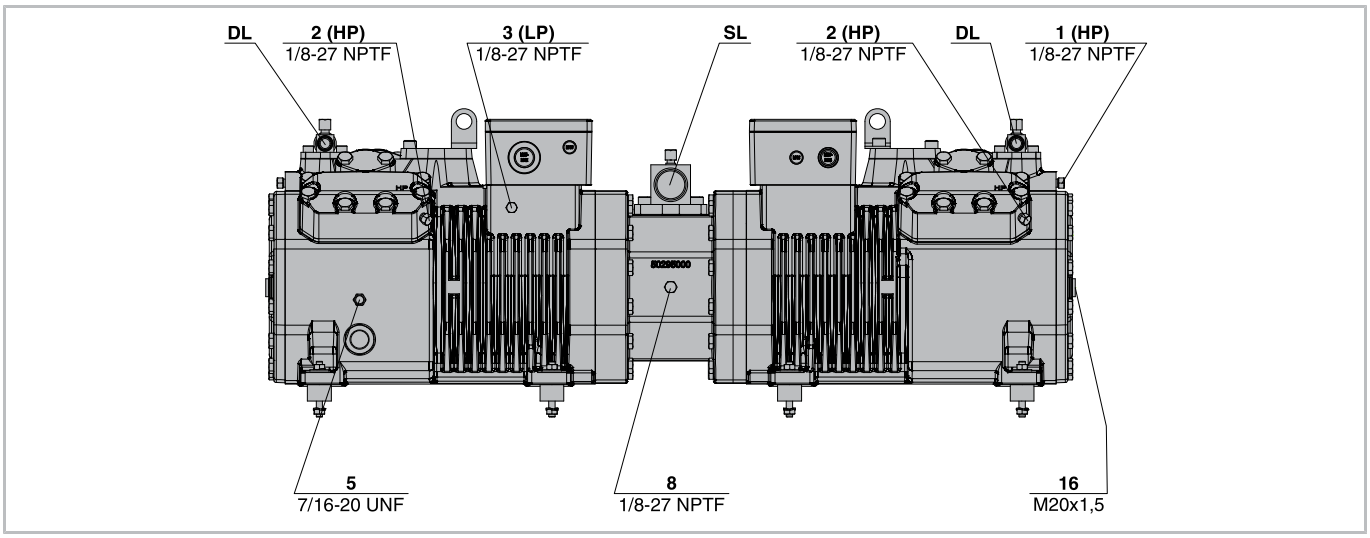

Fig. 18: 44FES-6(Y) .. 44BES-18(Y)

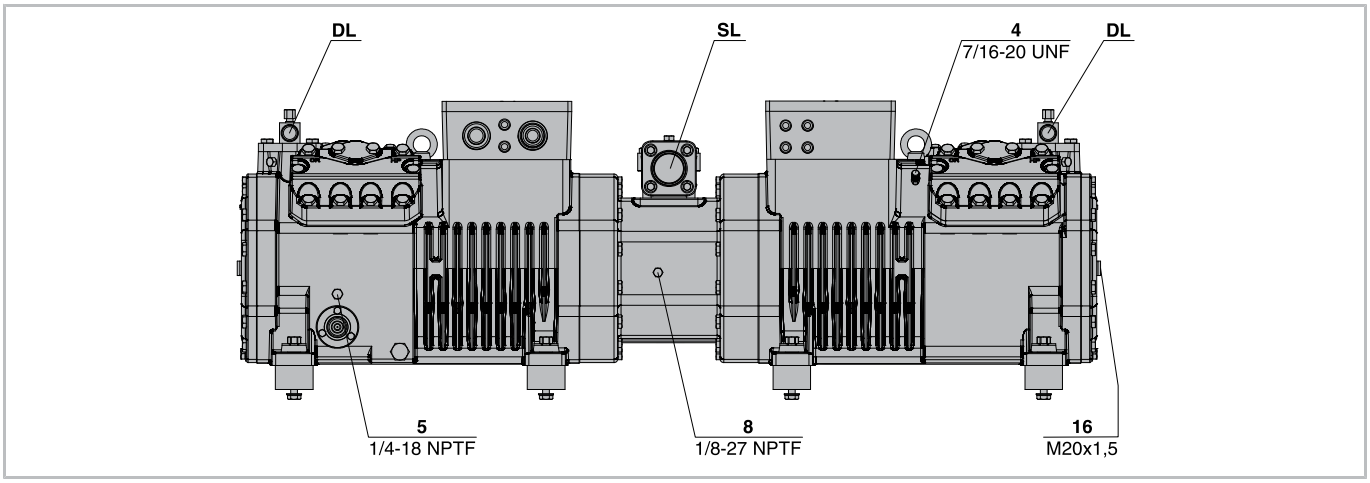

Fig. 19: 44VE(S)-14(Y) .. 44NE(S)-40(Y)

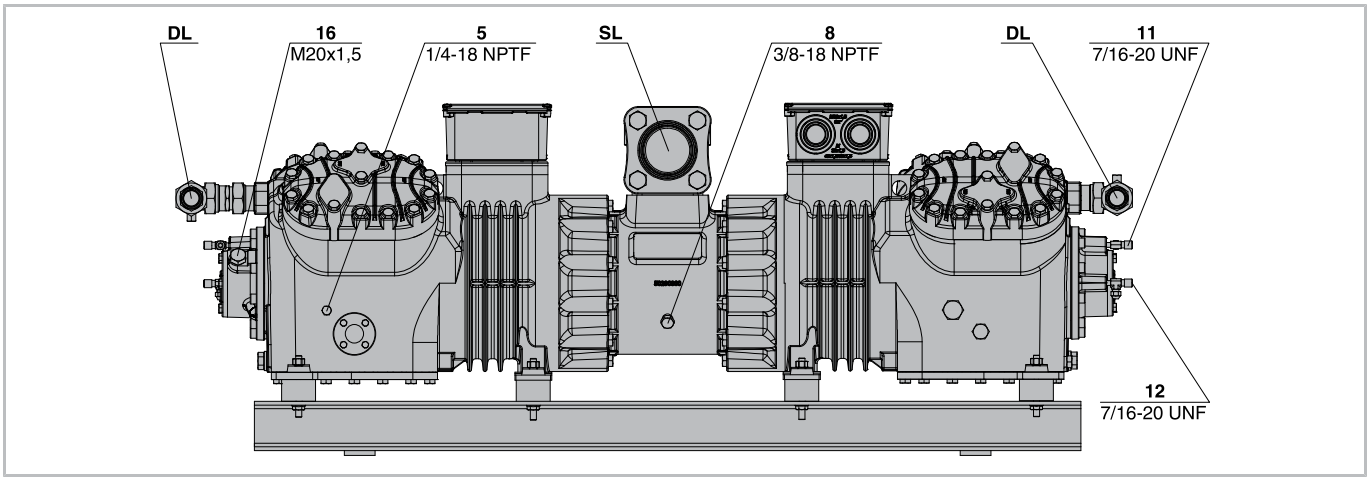

Fig. 20: 44JE-30(Y) .. 66FE-100(Y)

Connection positions	
1	High-pressure connection (HP)
2	Connection for discharge gas temperature sensor (HP) (in 4VE(S)-6Y .. 4NE(S)-20(Y) alternative connection for CIC sensor)
3	Low pressure connection (LP)
4	CIC system: Injection nozzle (LP)
4b	Connection for CIC sensor
4c	Connection for CIC sensor (MP / operation with refrigerant subcooler)
5	Oil fill plug
6	Oil drain
7	Oil filter (magnetic screw)
8	Oil return (oil separator)
8*	Oil return for NH_3 with insoluble oil
9	Connection for oil and gas equalisation (parallel operation)
9a	Connection for gas equalisation (parallel operation)
9b	Connection for oil equalisation (parallel operation)
10	Connection for oil heating
11	Oil pressure connection +
12	Oil pressure connection –
13	Cooling water connection
14	Intermediate pressure connection (MP)
15	Refrigerant injection (operation without liquid subcooler and with thermostatic expansion valve)
16	Connection for oil monitoring (opto-electronic oil monitoring device "OLC-K1" or differential oil pressure switch "Delta-PII")
17	Refrigerant inlet on the subcooler

Connection positions	
18	Refrigerant outlet on the subcooler
19	Clamping area
20	Terminal plate
21	Maintenance connection for oil valve
22	Pressure relief valve to the atmosphere (pressure side)
23	Pressure relief valve to the atmosphere (suction side)
24	Compressor module
SL	Suction gas line
DL	Discharge gas line

Tab. 4: Connection positions

Dimensions (if specified) may have tolerances according to EN ISO 13920-B.

The legend applies to all open and semi-hermetic BITZER reciprocating compressors and contains connection positions that do not occur in every compressor series.

5 Electrical connection

Electrical connection of the ECOLINE VARISPEED compressors:

- 2DES-3.F1Y
- 4FE-5.F1Y .. 4CE-6.F1Y
- 4DE-7.F3Y .. 4CE-9.F3Y
- 4VE-7.F3Y .. 4NE-20.F4Y

See enclosed Technical Information KT-210 or KT-220.

Compressors and electrical equipment comply with the EU Low Voltage Directive 2014/35/EU.

Connect mains cables, protective earth conductors and bridges (if needed) as specified on the labels in the terminal box. Observe EN60204-1, the safety standard series IEC60364 and national safety regulations.

NOTICE
Risk of short-circuit due to condensation water in the terminal box!
Use only standardised cable bushings.
When mounting, pay attention to proper sealing.

NOTICE
Risk of motor damage!
Improper electrical connection or compressor operation at incorrect voltage or frequency may lead to motor overload.
Observe the specifications on the name plate.
Connect properly and check the connections for tight fitting.

5.1 Mains connections

When dimensioning motor contactors, feed lines and fuses:

- Use the maximum operating current or maximum power consumption of the motor as a basis.
- Select the contacts according to the operational category AC3.
- Set the thermal overload relays to the maximum operating current of the compressor.

5.1.1 Motor version

Star or delta motor

Standard motor for:

- 2KES-05(Y) .. 2FES-3(Y)
- 2EES-2(Y) .. 2CES-4(Y)
- 4FES-3(Y) .. 4BES-9(Y)
- 22EES-4(Y) .. 22CES-8(Y)
- 44FES-6(Y) .. 44BES-18(Y)
- 4FDC-5Y .. 4CDC-9Y

This motor has been designed for direct-on-line start at two different voltages. The higher voltage is used for star mode operation and the lower voltage for permanent operation in delta mode. Depending on the selected mode, adjust the positions of the connection bridges or have their functions performed externally (e.g. by means of contactors).

Part winding (PW) motor

Time delay until switch-on of the 2nd part winding: max. 0.5 s!

Make the connections correctly! Wrong electrical connections will lead to opposite fields of rotation or to fields of rotation out of phase and therefore to a motor lock!

Standard motor for:

- 4VE(S)-6Y .. 4NE(S)-20(Y)
- 4JE-13Y .. 4FE-35(Y)
- 6JE-22Y .. 6FE-50(Y)
- 44VE(S)-14(Y) .. 44NE(S)-40(Y)
- 44JE-30(Y) .. 44FE-70(Y)
- 66JE-50(Y) .. 66FE-100(Y)
- 4VDC-10Y .. 4NDC-20Y

Winding partition 50%/50%.

Motor contactor selection:

1st contactor (PW 1): 60% of the max. operating current.

2nd contactor (PW 2): 60% of the max. operating current.

Motor version 3 when operated with external frequency inverter: Select contactors for max. operating current at 70 Hz!

- 8GE-50(Y) .. 8FE-70(Y)

Motor version Δ/ΔΔ with 60%/40% winding partition.

Motor contactor selection:

1st contactor (PW 1): approx. 70% of the max. operating current.

2nd contactor (PW 2): approx. 50% of the max. operating current (see adhesive label in terminal box). Strictly observe the order of the part windings!

Star-delta motor

The time delay between the switch-on of the compressor and the switch-over from star to delta operation shall not exceed 2 s.
Make the connections correctly!
Wrong electrical connections will lead to short-circuit!

Option for:

- 4VE(S)-6Y .. 4NE(S)-20(Y)
- 4JE-13Y .. 4FE-35(Y)
- 6JE-22Y .. 6FE-50(Y)
- 44VE(S)-14(Y) .. 44NE(S)-40(Y)
- 44JE-30(Y) .. 44FE-70(Y)
- 66JE-50(Y) .. 66FE-100(Y)

Upon request:

- 8GE-50(Y) .. 8FE-70(Y)

5.2 High potential test (insulation strength test)

The compressor was already submitted to a high potential test in the factory according to EN12693 or according to UL984 or UL60335-2-34 for the UL model.

NOTICE
Risk of defect on the insulation and motor failure!
Never repeat the high potential test in the same way!

However, a repeated test at reduced voltage of max. 1000 V AC is possible.

5.3 Line start permanent magnet motor (LSPM)

Compressors equipped with a line start permanent magnet motor (LSPM) can be identified by the letter "L" added to the type designation (e. g. 6CTEU-50LK or 4JTC-10LK). The built-in permanent magnets generate a non-negligible magnetic field which, however, is shielded by the compressor housing.

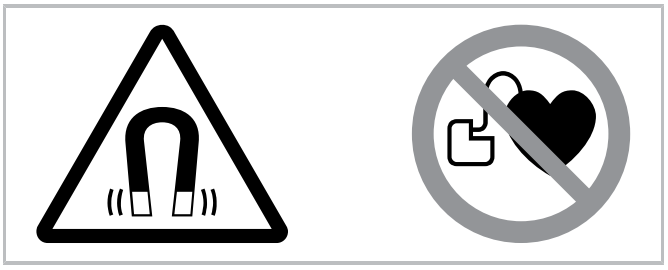

Fig. 21: Warning and prohibition signs on a compressor with permanent magnet motor

Safety signs attached to the compressor

WARNING
Strong magnetic field!
Keep magnetic and magnetizable objects away from compressor!
Persons with cardiac pacemakers, implanted heart defibrillators or metallic implants: maintain a clearance of at least 30 cm!

Work on a compressor with LSPM motor

Any work on the compressor may only be performed by persons that are not part of the specified group. Maintenance work beyond the work described in the present document and in the Operating Instructions KB-104 may only be performed after consultation with BITZER.

WARNING
Induction, electric voltage!
Never operate the motor with the terminal box open!

When the rotor rotates, electric voltage is induced in the terminal pins – even with the motor switched off.

Permitted work on a compressor with LSPM motor

Work on the electric supply and screw fixings in the terminal box, oil change as well as inspection and replacement of pressure relief valves, cylinder banks and sight glass. No special tools are needed for this work. Before opening the compressor, thoroughly clean its environment. Pay special attention to loose metal particles! Do not open the motor cover!

5.3.1 Overload protection for LSPM motors

The PTC temperature sensor integrated in the stator as a standard protects the LSPM motor from overload when the temperature rises (e. g. in case of prolonged locked rotor conditions). It is recommended installing an additional overload protective device that reacts more quickly, since repeated locking conditions would damage the magnets. Be sure that it is properly sized to ensure quick protection against serious electrical faults below the trigger level of the compressor fuse. For example, an overload relay with adjustable time or thermal overload switch may be selected.

- Allowed current values and durations:
  - Starting: max. 0.5 s (1.25 x LRA)
  - Operation: max. 2 s (1.25 x max operating current)

Information
Manual reset of compressor protection devices must not be changed to automatic reset by using external measures!

5.4 Protection devices

All protective functions listed can also be assumed by the compressor module CM-RC-01 (motor temperature, CIC) or connected to it (Delta PII, OLC-K1, HP, LP, oil heater). For further information, see Technical Information KT-230 and brochure KP-104.

NOTICE
Potential failure of the compressor protection device and the motor due to improper connection and/or faulty operation!
The terminals M1-M2 or T1-T2 on the compressor and B1-B2 on the protection device as well as its two orange cables must not come into contact with the control voltage or operating voltage!

5.4.1 SE-B1 or SE-B3

Standard for:

- 2KES-05(Y) .. 2FES-3(Y)
- 2EES-2(Y) .. 2CES-4(Y)
- 4FES-3(Y) .. 4BES-9(Y)
- 4VE(S)-6Y .. 4NE(S)-20(Y)
- 2DES-3.F1Y
- 4FE-5.F1Y .. 4CE-6.F1Y
- 4DE-7.F3Y .. 4CE-9.F3Y
- 4VE-7.F3Y .. 4NE-20.F4Y
- 4FDC-5Y .. 4CDC-9Y
- 4VDC-10Y .. 4NDC-20Y

5.4.2 SE-B2 or SE-B3

Standard for:

- 4JE-13Y .. 4FE-35(Y)
- 6JE-22Y .. 6FE-50(Y)
- 8GE-50(Y) .. 8FE-70(Y)

Both protection devices are permanently incorporated in the terminal box. The instrument leads for the motor temperature sensor are wired. For further connections, see Technical Information KT-122 or KT-210 and KT-220.

5.4.3 Differential oil pressure switch Delta-PII (option)

for the following compressors equipped with oil pump, incl. the respective tandem compressors:

- 4VE-6Y .. 4NE-20(Y)
- 4JE-13Y .. 4FE-35(Y)
- 6JE-22Y .. 6FE-50(Y)
- 8GE-50(Y) .. 8FE-70(Y)
- 4FE-5.F1Y .. 4CE-6.F1Y
- 4DE-7.F3Y .. 4CE-9.F3Y
- 4VE-7.F3Y .. 4NE-20.F4Y

For the electrical connection and information on function testing, see Technical Information KT-170.

5.4.4 Opto-electronic oil level monitoring OLC-K1 (option)

for the following compressors equipped with centrifugal lubrication, incl. the respective tandem compressors:

- 4FES-3(Y) .. 4BES-9(Y)
- 4VES-6Y .. 4NES-20(Y)
- 4FDC-5Y .. 4CDC-9Y
- 4VDC-10Y .. 4NDC-20Y

For the electrical connection and information on function testing, see Technical Information KT-180.

5.4.5 Discharge gas temperature sensor

Option for:

- 4FES-3(Y) .. 4BES-9(Y)
- 4VE(S)-6Y .. 4NE(S)-20(Y)
- 4JE-13Y .. 4FE-35(Y)
- 6JE-22Y .. 6FE-50(Y)
- 8GE-50(Y) .. 8FE-70(Y)
- 4FE-5.F1Y .. 4CE-6.F1Y
- 4DE-7.F3Y .. 4CE-9.F3Y
- 4VE-7.F3Y .. 4NE-20.F4Y
- 4FDC-5Y .. 4CDC-9Y
- 4VDC-10Y .. 4NDC-20Y

can be retrofitted.

- Screw the sensor element into the HP connection, see chapter Connection diagrams of single compressors, page 12.

– Compressors with integrated start unloading: The sensor must be incorporated in the start unloading cylinder head (see figure 22, page 21).

- Connect the instrument leads in series to the motor temperature sensors (see adhesive label in terminal box) and see figure 22, page 21).

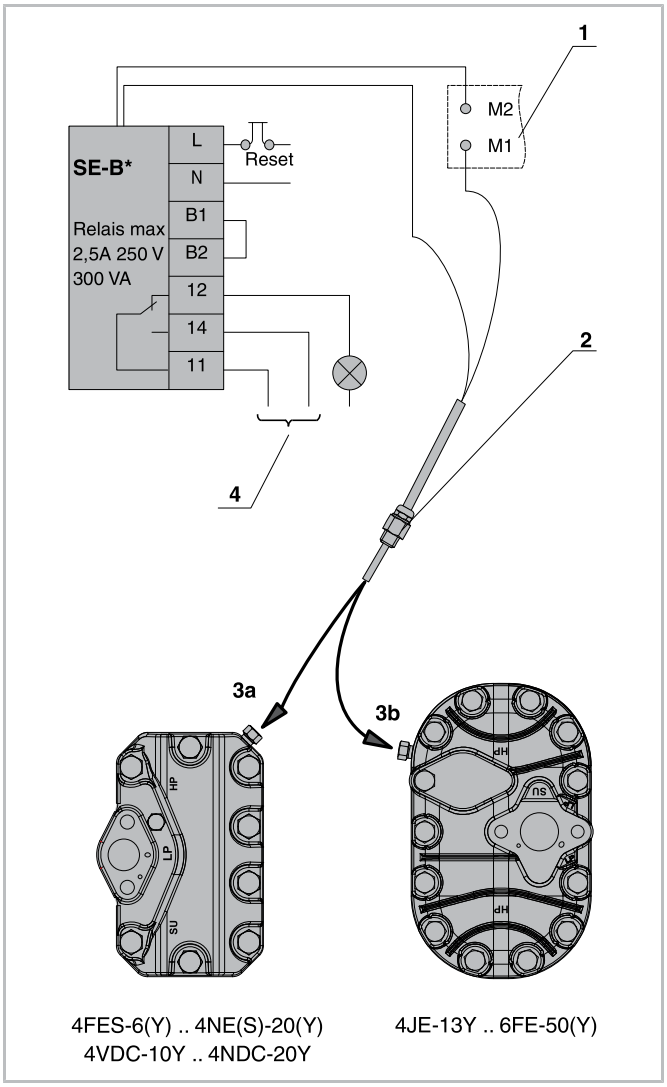

Fig. 22: Discharge temperature sensor for start unloading

1	Terminal plate
2	Discharge gas temperature sensor
3	Connection position at the cylinder head
4	Safety chain

5.4.6 Safety devices for pressure limiting (HP and LP)

- These safety devices are required for securing the compressor's application range in order to avoid unacceptable operating conditions.
- Do not connect any safety devices to the service connection of the shut-off valve!

5.4.7 Oil heater

The oil heater ensures the lubricity of the oil even after long standstill periods. It prevents increased refrigerant concentration in the oil and therefore reduction of viscosity.

The oil heater must be operated while the compressor is at standstill in case of

- outdoor installation of the compressor,
- long shut-off periods,
- high refrigerant charge,
- possible refrigerant condensation in the compressor.

Connection according to Technical Information KT-150.

5.4.8 CIC system

Electronically regulated liquid injection (LI) serves for ensuring the application limits in low temperature applications using certain refrigerants such as R407F, R407A and R22. For the technical description as well as for mounting and electrical connection information, see Technical Information KT-130. An improved version of the refrigerant injection (RI) is used together with the compressor module CM-RC-01, see Technical Information KT-230.

6 Commissioning

The compressor has been carefully dried, checked for tightness and filled with a holding charge (N_2) before leaving the factory.

DANGER
Risk of explosion!
Never pressurize the compressor with oxygen (O_2) or other industrial gases!

WARNING
Risk of bursting!
A critical shift of the refrigerant ignition limit is possible in case of excess pressure.
Do not add a refrigerant (e.g. as a leak indicator) to the test gas (N_2 or air).
Environmental pollution in case of leakage and when deflating!

NOTICE
Risk of oil oxidation!
Check the entire system for strength pressure and tightness, preferably using dried nitrogen (N_2).
When using dried air: Remove the compressor from the circuit – make sure to keep the shut-off valves closed.

6.1 Checking the strength pressure

Check the refrigerant circuit (assembly) according to EN378-2 (or other applicable equivalent safety standards). The compressor had been already tested in the factory for strength pressure. A tightness test is therefore sufficient, see chapter Checking tightness, page 22. If you still wish to perform a strength pressure test for the entire assembly:

DANGER
Risk of bursting due to excessive pressure!
The pressure applied during the test must never exceed the maximum permitted values!
Test pressure: 1.1-fold of the maximum allowable pressure (see name plate). Make a distinction between the high-pressure and low-pressure sides!

6.2 Checking tightness

Check the refrigerant circuit (assembly) for tightness, as a whole or in parts, according to EN378-2 (or other applicable equivalent safety standards). For this, create an excess pressure, preferably using dried nitrogen.

Observe test pressures and safety reference, see chapter Checking the strength pressure, page 22.

6.3 Evacuation

- Switch on the oil heater.
- Open all shut-off valves and solenoid valves.
- Use a vacuum pump to evacuate the entire system, including the compressor, on the suction side and the high pressure side.
  With the vacuum pump shut off, a "standing vacuum" lower than 1.5 mbar must be achieved.
- Repeat the operation several times if necessary.

NOTICE
Risk of damage to the motor and compressor!
Do not start the compressor while it is in a vacuum!
Do not apply any voltage, not even for testing!

6.4 Charging refrigerant

Use only allowed refrigerants, see table 1, page 5 and see table 2, page 5.

DANGER
Risk of bursting of components and pipelines due to hydraulic excess pressure while feeding liquid.
Serious injuries are possible.
Avoid overcharging the system with refrigerant under all circumstances!

WARNING
Risk of bursting due to counterfeit refrigerants!
Serious injuries are possible!
Purchase refrigerants only from reputable manufacturers and reliable distributors!

NOTICE
Risk of wet operation during liquid feeding!
Measure out extremely precise quantities!
Keep the oil temperature above 40°C.

- Before charging with refrigerant:
- Do not switch on the compressor!
- Switch on the oil heater.
- Check the oil level in the compressor.
- Charge condenser or receiver, on systems with flooded evaporator, maybe also the evaporator directly with liquid refrigerant.
- Blends must be taken out of the charging cylinder as a solid liquid.
- After commissioning, it may be necessary to add refrigerant: While the compressor is running, charge with refrigerant on the suction side, preferably at the evaporator inlet.

6.5 Checks prior to compressor start

- Oil level (within the marked sight glass area).

- Oil temperature (approx. 15 .. 20 K above ambient temperature or suction-side saturation temperature).
- Setting and functions of safety and protection devices.
- Setpoints of the time relays.
- Cut-out pressure values of the high-pressure and low-pressure switches.
- Check if the shut-off valves are opened.

In case of compressor replacement

Oil is already in the circuit. It may therefore be necessary to drain off some oil.

NOTICE
In case of larger oil quantities in the refrigerant circuit: Risk of liquid slugging when the compressor starts!
Maintain the oil level within the marked sight glass area!

6.6 Compressor start

6.6.1 Lubrication/oil level monitoring

- Check the lubrication of the compressor directly after the compressor start.

  The oil level must be visible in the middle of the sight glass (¼ to ¾ of the sight glass height).
- Check the oil level repeatedly within the first hours of operation!

Compressor equipped with oil pump

- 4VE-6Y .. 4NE-20(Y)
- 4JE-13Y .. 4FE-35(Y)
- 6JE-22Y .. 6FE-50(Y)
- 8GE-50(Y) .. 8FE-70(Y)
- 4FE-5.F1Y .. 4CE-6.F1Y
- 4DE-7.F3Y .. 4CE-9.F3Y
- 4VE-7.F3Y .. 4NE-20.F4Y
- If necessary, check oil pressure (on the Schrader connections of the oil pump, using a pressure gauge)

Differential oil pressure (setpoint): 1.4 – 3.5 bar.

Minimum allowed suction pressure (at oil pump on suction side): 0.4 bar.

6.6.2 Oil monitoring (option)

Oil pressure monitoring

- Protection device: Delta-PII.
- Electronic differential oil pressure switch – Option for compressors with integrated oil pump, see chapter Differential oil pressure switch Delta-PII (option), page 20.
- Differential cut-out pressure: 0.65 bar.
- Cut-out time delay when differential oil pressure is too low: 90 s ± 5 s.

For further information, see Technical Information KT-170.

Oil level monitoring

- Protection device: OLC-K1.
- Opto-electronic oil level monitoring – Option for compressors equipped with centrifugal lubrication, see chapter Opto-electronic oil level monitoring OLC-K1 (option), page 20.

This system is recommended in particular for systems with widely extended pipe work or in applications in which larger quantities of oil may migrate to the suction gas line or to the evaporator. For further details, see Technical Information KT-180.

NOTICE
Risk of wet operation!
Maintain the discharge gas temperature well above the condensing temperature: at least 20 K.
At least 30 K for R407A, R407F and R22.

NOTICE
Risk of compressor failure due to liquid slugging!
Before adding larger quantities of oil: check the oil return!

6.6.3 Vibrations and frequencies

Check the system carefully to detect any abnormal vibration. In the case of strong vibrations, take mechanical measures (e.g. use pipe clamps or install vibration dampers).

Speed-controlled compressors

- 2DES-3.F1Y
- 4FE-5.F1Y .. 4CE-6.F1Y
- 4DE-7.F3Y .. 4CE-9.F3Y

- 4VE-7.F3Y .. 4NE-20.F4Y

Skip frequencies that may nevertheless give rise to resonances in the programming of the frequency inverter.

NOTICE
Risk of burst pipes and leakages on the compressor and system components!
Avoid strong vibrations!

6.6.4 Cycling rate

The compressor should not start more than 8 times per hour. Be sure to adhere to the minimum running time:

Motor power	Minimum running time
< 5.5 kW	2 min
5.5 .. 15 kW	3 min
> 15 kW	5 min

6.6.5 Checking the operating data

- Evaporating temperature
- Suction gas temperature
- Condensing temperature
- Discharge gas temperature
- Oil temperature
- Cycling rate
- Current
- Voltage

Prepare data protocol.

6.6.6 Particular notes on safe compressor and system operation

Analyses show that the vast majority of compressor failures occur due to inadmissible operating conditions. This is especially true for failures deriving from lack of lubrication:

- Expansion valve operation – pay attention to the manufacturer's guidelines!
  - Position the temperature sensor correctly at the suction gas line and fasten it.
  - When using a liquid suction line heat exchanger: Position the sensor as usual after the evaporator and not after the heat exchanger.
  - Ensure sufficiently high suction gas superheat, while also taking into account the minimum discharge gas temperatures.
  - Stable operation at all operating and load conditions (also part load, summer/winter operation).
  - Solid liquid at the expansion valve inlet.
- Avoid refrigerant migration (from high pressure to low pressure side or into compressor) during longer shut-off periods!
  - Always maintain oil heater operation when the system is at standstill. This is valid for all applications.
  - Pump down system (especially if evaporator can get warmer than suction line or compressor).
  - Automatic sequence change for systems with multiple refrigerant circuits.

Information
In the case of refrigerants with low isentropic exponent (e.g. R134a), a heat exchanger between the suction gas line and the liquid line may have a positive effect on the system's operating mode and coefficient of performance.
Arrange the temperature sensor of the expansion valve as described above.

7 Operation

7.1 Regular checks

Check the system at regular intervals according to national regulations. Check the following points:

- Operating data, see chapter Compressor start, page 23.
- Oil supply, see chapter Compressor start, page 23.
- Safety and protection devices and all components for compressor monitoring (check valves, discharge gas temperature sensors, differential oil pressure limiters, pressure limiters, etc.).
- Tight seat of electrical cable connections and screwed joints.
- Screw tightening torques (see KW-100).
- Refrigerant charge.
- Tightness.
- Prepare data protocol.

7.2 Condensation water

For applications with ambient air, low suction gas superheat and/or insufficient sealing of the terminal box, condensation water may form in the terminal box. In

this case it's recommended to coat the terminal plate and terminals with contact grease (e.g. Shell Vaseline 8401, contact grease 6432, or equivalent).

Furthermore for the compressors

- 2KES-05(Y) .. 2FES-3(Y)
- 2EES-2(Y) .. 2CES-4(Y)
- 4FES-3(Y) .. 4BES-9(Y)
- 4FDC-5Y .. 4CDC-9Y

the condensing water may be drained by permanently removing the drain plug (see figure 23, page 25).

If the drain plug is removed, the enclosure class of the terminal box drops from IP65 to IP54!

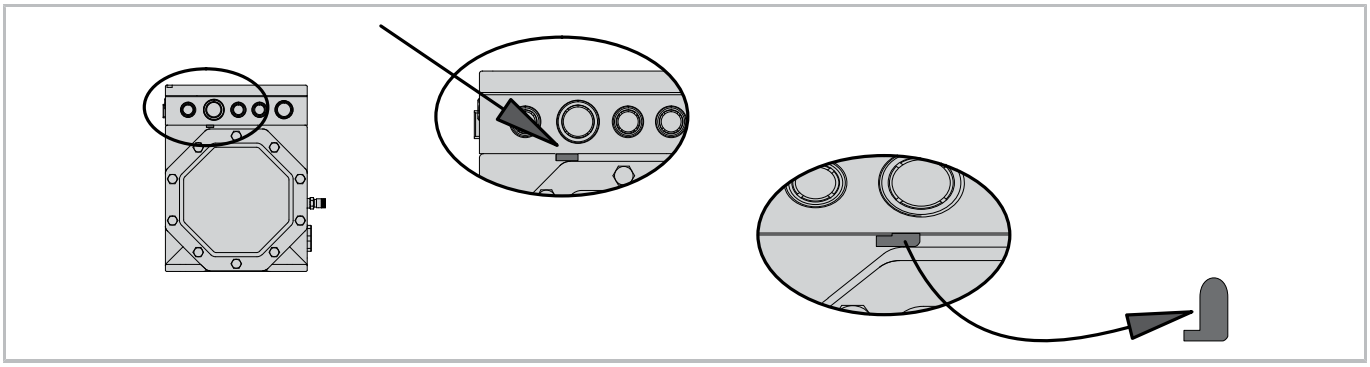

Fig. 23: Drain plug for condensation water on the terminal box

8 Maintenance

8.1 Oil change

Oil change is not compulsory for factory-made systems. In the case of "field installations" or operation near application limits, it is recommended to change the oil for the first time after approx. 100 operating hours. During oil change, also clean oil filters and magnetic plugs (for compressors with integrated oil pump).

After that, change the oil and clean oil filters and magnetic plugs approximately every 3 years or 10,000 .. 12,000 operating hours. Oil types: see table 1, page 5 and see table 2, page 5.

NOTICE
Damage to the compressor caused by degraded ester oil.
Moisture is chemically bound to the ester oil and cannot be removed by evacuation.
Proceed with extreme care:
Any penetration of air into the system and oil drum must be avoided under all circumstances.
Use only oil drums in their original unopened state!

When using A2L refrigerants

WARNING
Risk of refrigerant evaporation from the used oil.
Increased risk with A2L refrigerants due to flammability!
Used oil may still contain relatively high percentages of dissolved refrigerant even at atmospheric pressure.
Transport and storage Fill used oil into a pressure-resistant vessel. Store under a nitrogen atmosphere (holding charge).

Dispose of waste oil properly!

8.2 Internal pressure relief valve

One pressure relief valve each built into:

- 4NE-14.F3Y and 4NE-20.F4Y
- 4JE-13Y .. 4FE-35(Y)
- 6JE-22Y .. 6FE-50(Y)

2 pressure relief valves each built into:

- 8GE-50(Y) .. 8FE-70(Y)

The valves are maintenance-free.

However, after repeated venting, it may leak permanently because of abnormal operating conditions. The

consequences are reduced performance and a higher discharge gas temperature.

9 Decommissioning

9.1 Standstill

Leave the oil heater switched on until disassembly. This prevents increased refrigerant concentration in the oil.

WARNING
Risk of refrigerant evaporation from the oil.
Increased risk of flammability, depending on the refrigerant!
Shut-down compressors or used oil may still contain rather high amounts of dissolved refrigerant.
Close the shut-off valves on the compressor and extract the refrigerant!

9.2 Dismantling the compressor

WARNING
The compressor is under pressure!
Serious injuries are possible.
Depressurize the compressor!
Wear safety goggles!

Close the shut-off valves on the compressor. Extract the refrigerant. Do not deflate the refrigerant, but dispose of it properly!

Loosen screwed joints or flanges on the compressor valves. Remove the compressor from the system; use hoisting equipment if necessary.

9.2.1 Disposing of the compressor

Drain the oil from the compressor. Dispose of waste oil properly! Have the compressor repaired or dispose of it properly!

When returning compressors that have been operated with flammable refrigerant, mark the compressor with the symbol "Caution flammable gas", as the oil may still contain refrigerant.